# FlagV Kiosk

## Datasheet

Welcome to NCOM

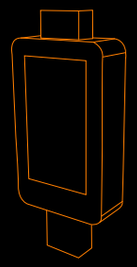

Version: 17_02_V1

ncom
innovative solutions

# FlagV

Interactivity with dimension

**Technical Specifications**
**FlagV Kiosk**

Dimensions: H2500 x W1200 x D350
Weight: aprox. 150 Kg.

The FlagV model was designed specially for outdoor applicattions.

This model can be manufactured in stainless steel or painted steel (available in all RAL colors) using steel plate of 1,5mm to 2,5mm which ensures the stability and rigidity of the all structure.

This Kiosk is designed specialy for multimedia advertising purposes and support large displays (32'' to 108'').

The two sides of the kiosk are designed so that there is a great vesatility. Opcional - 2 large advertising displays, one in each side / 1 large advertising display and 1 interactive display in other side.

The area where the PC will be installed has security locks, general switch and is easily detachable, leaving enough space for the installation and access to a minitower PC.

On the side of the monitor are two speakers and the kiosk has 2 independent systems of ventilation, one for the monitor and other for the PC.

The FlagV is normally equipped with a Atom CPU with a 160 GB hard drive, 1 Gb Ram Memory, a 128Mb graphic card and a 10/100 mb ethernet, Windows 7 Starter.

This kiosk can be produced with glass protection (top and 2 laterals) for outdoor enviroments.

FlagV
Interactivity with dimension

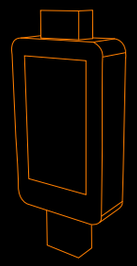

ncom
innovative solutions

CE

# FlagV

Distance comparison and main features

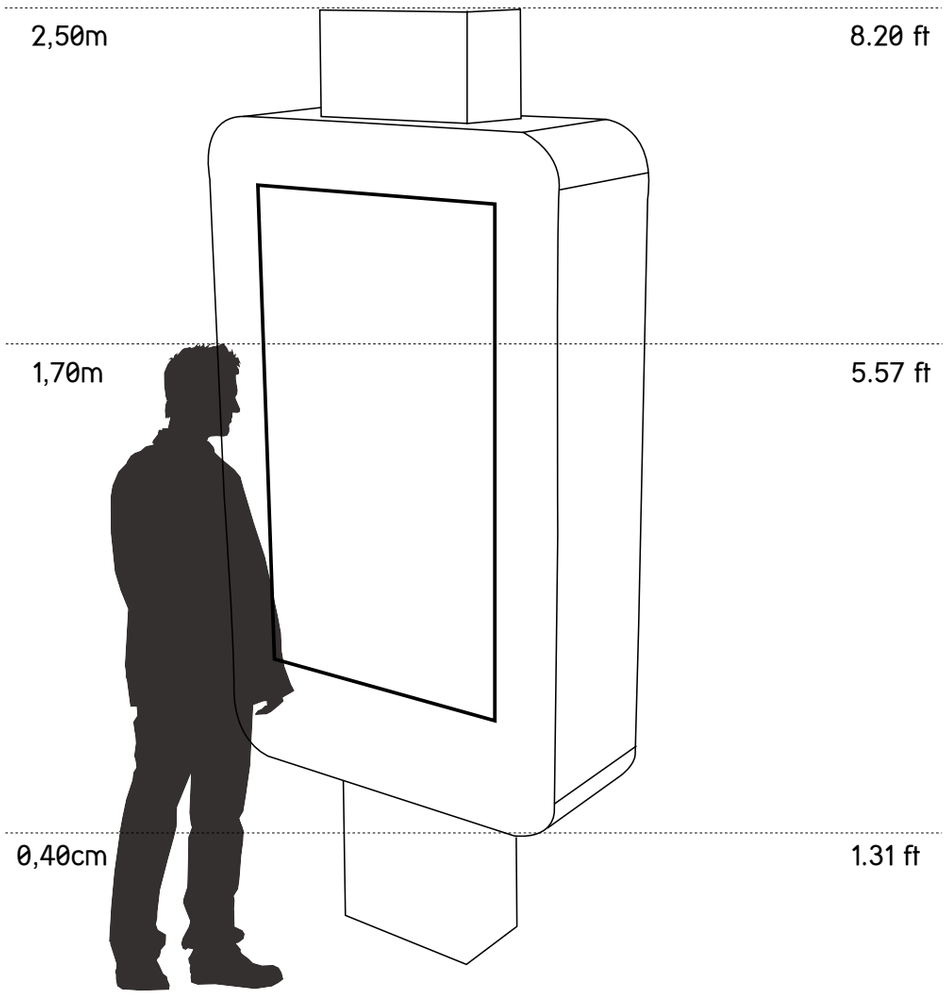


**Type**

- [x] Indoor / Outdoor

**Materials**

- [x] Painted Steel
- [x] Stainless Steel

**Options**

- [x] Large Displays 17" to 103"
- [x] YdSignage Software
- [x] Double Face Displays (Touchscreen or TFT)
- [x] Glass Protection

ncom
innovative solutions

CE

FlagV
Distance comparison and main features

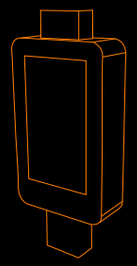

# FlagV

Kiosk measures

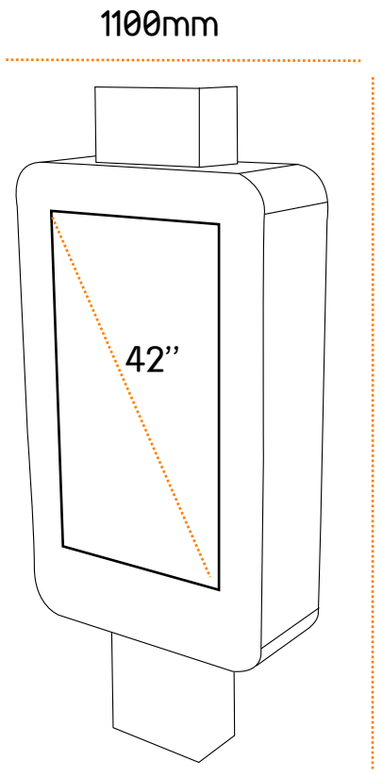


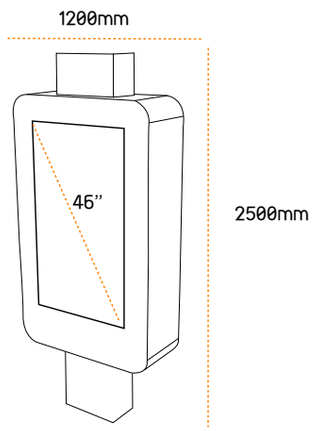


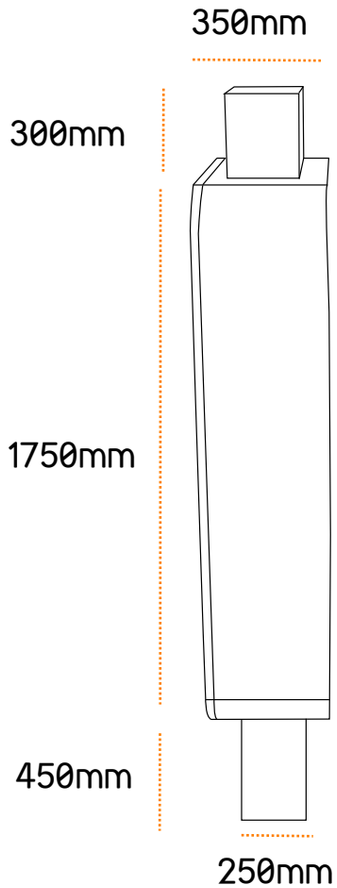


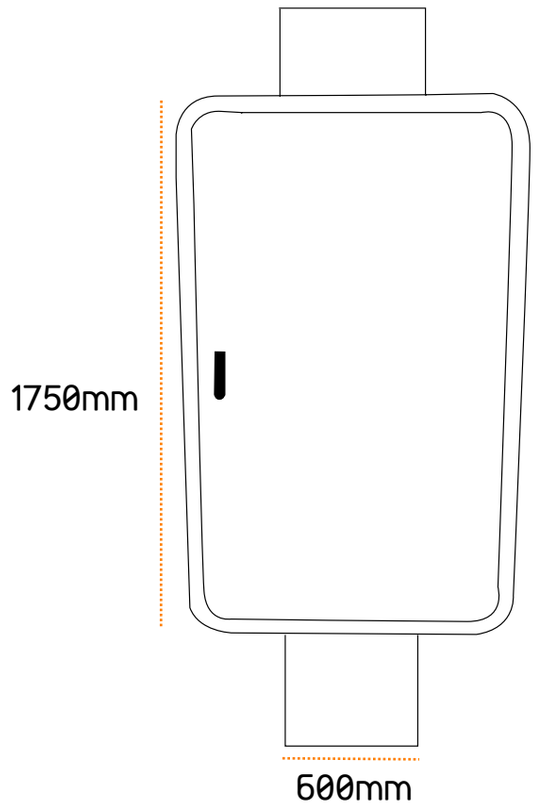


ncom
innovative solutions

CE

FlagV
Kiosk measures

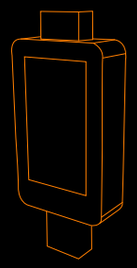

# FlagV

Technical data

## Dimensions:

- 42'' Display (resolution: 1920x 1080 Pixel)
- H2500 W1200 D350

## Weight:

150 kg

## Configuration:

- Interactivity with dimension
- Stainless steel AISI304 or painted steel (RAL Colors)
- Steel plate of 1,5mm to 2,5mm
- 42" display
- Integrated speakers

## Optional:

- 46" to 108'' display
- Atom or Dual Core PC computer
- Microsoft Windows 7 Professional
- Ykiosk software package
- Touch screen (SAW - antivandalism)
- Wireless networking - WLAN
- Bluetooth functionality
- Webcam
- 2 side displays

- Other components can be integrated changing kiosk dimensions: ticket printer, coin validator, bill validator, card readers, antivandalic keyboard, proximity sensor, etc.

ncom
innovative solutions

CE

FlagV
Technical data

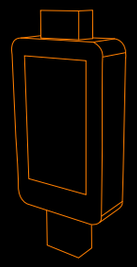

# NCOM | innovative solutions

This document is provided only for information purposes. The presented information is subject to change without prior notice, given the constant evolution of content.
NCOM is not responsable for any errors or omissions in this document, as a result of its publication.

ncom
innovative solutions

NCOM Equipments | innovative solutions | Bucuresti Ion Roata nr 9 et 5 | tel: +4 0769 06 06 15 | +4 0721 33 52 04 | Romania
www.ncom.ro | office@ncom.ro